Copeland™
brand products

Spare Parts List

8DH6-400X

EMERSON™

8DH6-400X

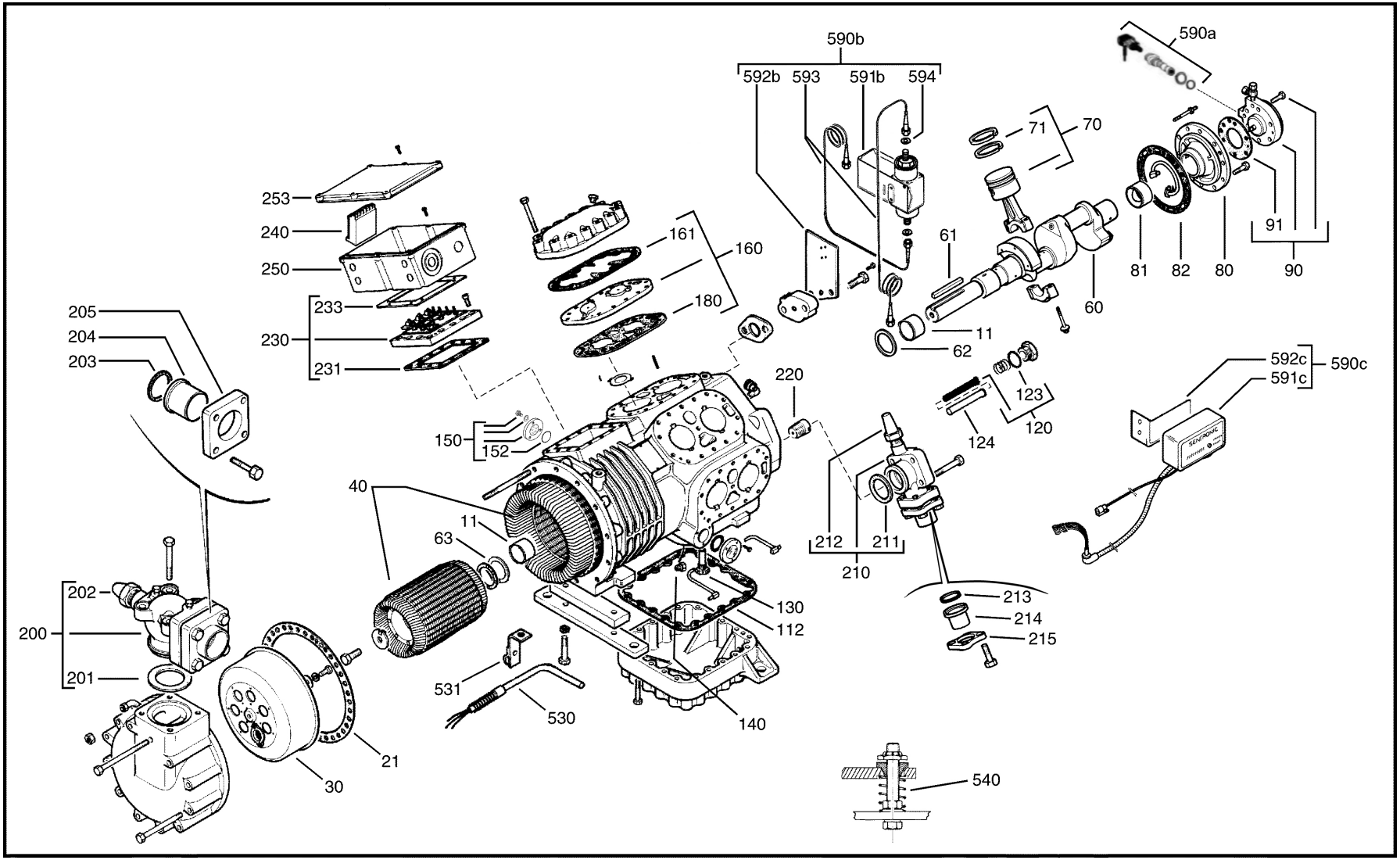

Spare parts lists are subject to change without notice. If in any doubt, please contact your local Emerson Climate Technologies representative.

8DH6-400X

580
Oil balance tubes for 2 compressors/Equilibrage d'huile entre 2 compresseurs
Ölausgleichsleitung für 2

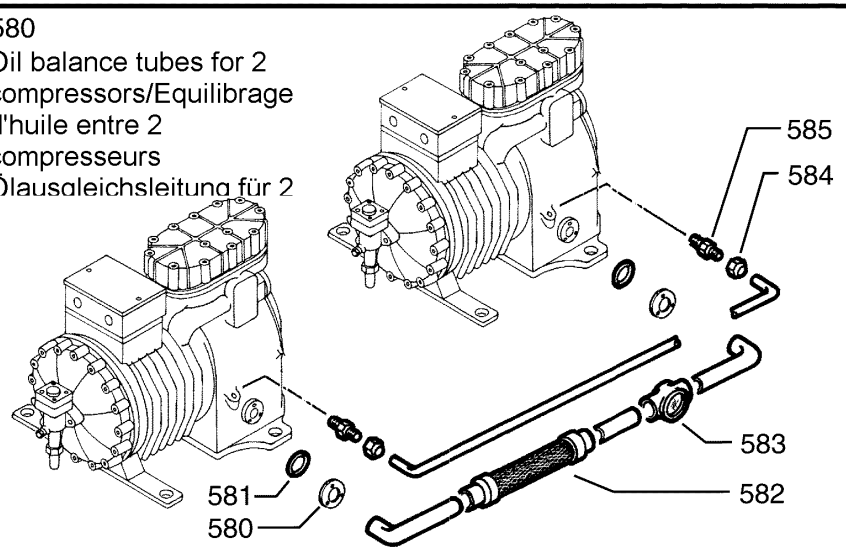

570
Capacity Control
Reduction de puissance
Leistungsregelung

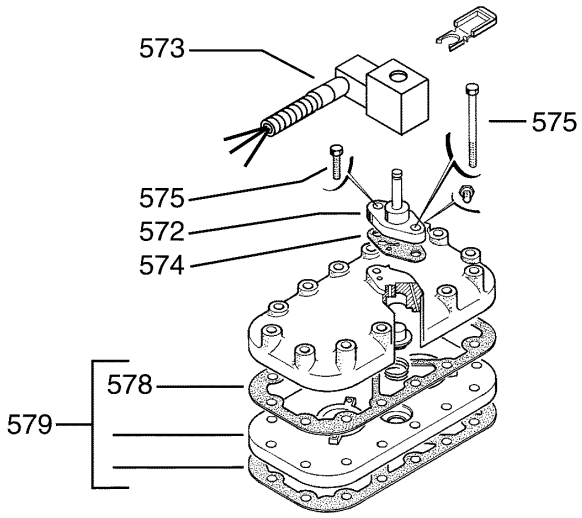

550
Unloaded Start
Demarrage à vide
Anlaufentlastung

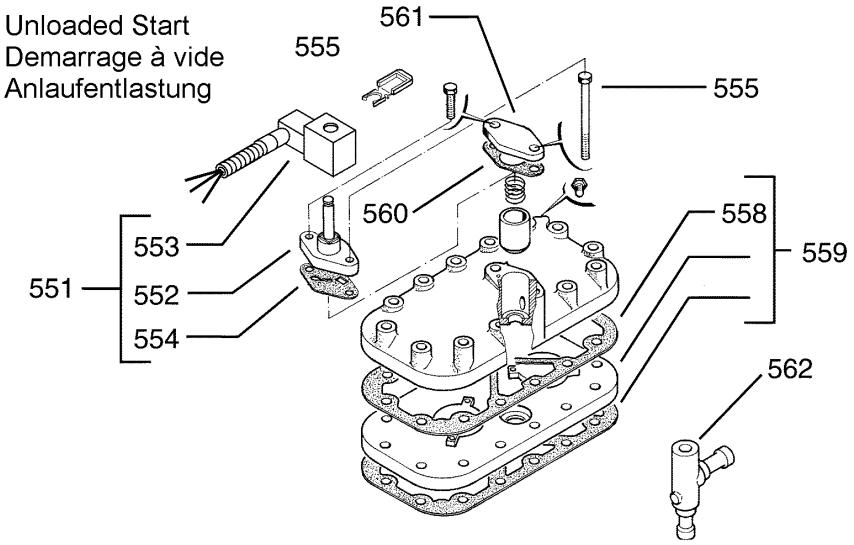

600 Additional Fan/Ventilation
Additionnelle/Zusatzlifter EBM 75 Z

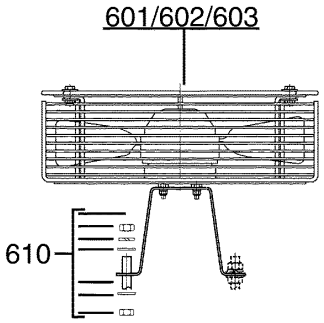

600 Additional fan/Ventilation
Additionnelle/Zusatzlifter 60w

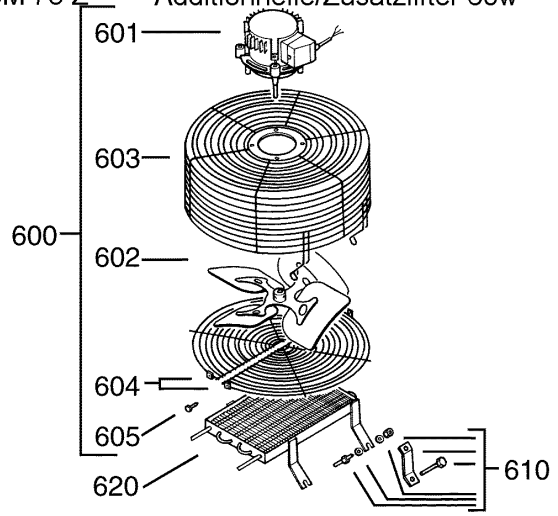

Spare parts lists are subject to change without notice. If in any doubt, please contact your local Emerson Climate Technologies representative.

8DH6-400X

Pos No.	Ident No.	Description	Qty	Technical information	Additional information	Comments	Replaced by
11	3004921	Bearing	2			Motor & Gear Side	
21	2880771	Gasket	1			Housing Cover	
40	3160201	Motor unit: 40HP AWM/D or 45/55	1				
40	3160234	Motor unit: 40HP EWM/D or 12/27	1				
40	3160223	Motor unit: 40HP EWL or 33	1				
40	3160212	Motor unit: 40HP EWK or 49	1				
30	2846184	Suction screen w gasket	1				
60	2830641	Crankshaft kit (including key)	1				
61	2947292	Crankshaft key	1				
62	2917631	Washer	2				
63	2933186	Washer: crankshaft	1				
70	2836285	Piston & conrod assy	4		2 Pieces		
71	2972096	Piston ring	8	4 H/L MOLY			
71	2918883	Piston ring	8	4 H/L			
80	3105380	Housing cover w bearing	1				
81	3004921	Bearing	1			Housing Cover	
82	2884251	Gasket: housing cover	1				2880782
90	3121722	Oil pump assy	1				
91	2884262	Gasket: oil pump	1				
	2947601	O-ring: oil pump	1		IOPS/OPS1/Sentronic		
112	2883087	Gasket: bottom plate	1				
120	3806796	Oil screen w gasket	1		after 03.91		
123	3199949	Gasket: oil screen	1		after 03.91		
120	3806785	Oil screen w gasket	1		before 03.91		
123	2880920	Gasket	1		before 03.91	Oil Screen	
124	2882722	Sleeve: oil screen	1				
130	2524817	Check Valve: gas	1				
	2940995	Guide pipe	1				
	2942355	Washer	1				
140	2862060	Check Valve: oil	1				
150	2482519	Oil sight glass assy	2				
152	2042028	Gasket	2			Oil Sight Glass	
160	3139749	Valve plate kit w gaskets	4				
	3139727	Gasket kit for valve plate	4				
161	2880828	Gasket: below cylinder head	4				
180	3158453	Gasket: below valve plate	4	0.040"			
200	2837142	Shut-off valve w gasket & w/o bolts	1	2 5/8"	Brazed	Suction	
201	2880873	Gasket	1			Suction Sov	

Spare parts lists are subject to change without notice. If in any doubt, please contact your local Emerson Climate Technologies representative.

8DH6-400X

Pos No.	Ident No.	Description	Qty	Technical information	Additional information	Comments	Replaced by
202	2943698	Valve cap	1				
203	2880873	Gasket	1			Pipe Socket	
204	3120843	Pipe socket	1	2 5/8"			
205	3011672	Flange	1	2 5/8"; 3 1/8"			
200	2846140	Shut-off valve w gasket & bolts	1	4 1/8"	Brazed	Suction, Tandem	
201	2881194	Gasket: suction SOV, tandem	1				
203	3011616	Gasket: pipe socket: tandem	1	4 1/8"			
204	3011569	Pipe socket: tandem	1	4 1/8"			
205	3011683	Flange: tandem compressors	1	4 1/8"			
210	2837084	Shut-off valve w gasket & w/o bolts	1	1 5/8"	1 5/8" Brazed	Discharge	
211	2880851	Gasket	1			Discharge Sov	
212	2943687	Valve cap	1				
213	2881467	Gasket: pipe socket	1				
214	2938830	Pipe socket	1	1 5/8"			
215	3011412	Flange	1	1 5/8"			
	2846117	Shipping plate kit	1		W Gaskets & Screws	Suction	
	2846128	Shipping plate kit	1		W Gaskets & Screws	Discharge	
220	3086072	Pressure relief valve: internal	1				
221	2829114	Gasket	1			Blind Plate	
230	3068247	Terminal plate assy	1				
231	2880840	Gasket: terminal plate	1				
	2882879	Terminal parts kit	1				
233	2938396	Gasket: terminal box	1				
240	3216466	Module: thermistor protection	1	Kriwan INT69TM2 115-230V (standard)	Internal		
240	3161259	Module: thermistor protection	1	Kriwan INT69TM 24V AC	Internal		
240	3161248	Module: thermistor protection	1	Kriwan INT69TM 24V DC	Internal		
240	3237198	Module: thermistor protection	1	Kriwan INT69TM, 200-260V	Internal		
250	2937757	Terminal box	1				
253	3237983	Cover: terminal box	1	IP54	for EW*, TW*, AW*		
510	3008605	Gasket kit D8D*5	1				
530	3210208	Crankcase heater	1	200W, 230V	Internal		
530	3210173	Crankcase heater	1	200W, 120V	Internal		
530	3210195	Crankcase heater	1	200W, 480V	Internal		
531	2941807	Retainer-wire: crankcase heater 200W	1				
540	2918101	Mounting parts kit: springs	1				
	3063662	Mounting parts kit (rubber) for parallel application	1		for deep sump		

Spare parts lists are subject to change without notice. If in any doubt, please contact your local Emerson Climate Technologies representative.

8DH6-400X

Pos No.	Ident No.	Description	Qty	Technical information	Additional information	Comments	Replaced by
550	3139783	Unloaded start conversion kit	1	240V	W Control Valve, W Coil, Wo Check Valve		
	3139807	Unloaded start conversion kit	1		Wo Control Valve, Wo Coil, Wo Check Valve		
551	2900208	Unloaded start assy	1	220V	Control Valve, Gasket, Coil		
551	2900219	Unloaded start assy	1	120V	Control Valve, Gasket, Coil		
551	2897784	Unloaded start assy	1	24V AC	Control Valve, Gasket, Coil		
551	2900231	Unloaded start assy	1	24V, DC	Control Valve, Gasket, Coil		
552	2962471	Control valve 705RA	1	ALCO 705RA 001 #801257	wo coil		
553	3160518	Solenoid coil	1	208-240V AC, 50/60HZ	ALCO		
553	3160507	Solenoid coil	1	120V AC, 50/60Hz, IP10	ALCO		
553	3160494	Solenoid coil	1	24V AC, 50/60 Hz	ALCO		
553	2831337	Solenoid coil	1	24 V, DC	Alco		
554	2884115	Gasket	1			Control Valve	
555	2871546	Bolt	1				
555	2939173	Bolt	1	HEX.3/8-16UNCX3 3/4 10.9P			
558	2880839	Gasket: below cylinder head	1		For UI Start/Capacity Control		
562	2946926	Check valve NRV35S	1				
562	2952265	Check valve NRVH35S, with strong spring	1		Tandem & Parallel Systems		
559	3139761	Valve plate assy: unloaded start/capacity control	1		For UI Start/Capacity Control		
560	2884115	Gasket	1			Shipping Plate	
561	2830016	Shipping plate	1			For Unloaded Start	
570	3139829	Capacity control conversion kit	1	230 V, 50/60 Hz - ALCO	Special Valve plate, Cylinder head, Control valve with coil and gaskets		
	3139841	Capacity control conversion kit - Inactive	1		Wo Control Valve, Wo Coil	25%	
571	2835339	Capacity control kit	1	230V AC, 50/60Hz - ALCO	Control Valve, Gasket, Coil	25%	
571	2865785	Capacity control kit	1	120V AC, 50/60Hz - ALCO	Control Valve, Gasket, Coil	25%	
571	2865796	Capacity control kit	1	24V AC, 50/60Hz - ALCO	Control Valve, Gasket, Coil	25%	
571	2879562	Capacity control kit	1	24V DC - ALCO	Control Valve, Gasket, Coil	25%	
572	2640831	Control valve 703RB	1	ALCO 703RB 001 # 801197	Wo Coil		
573	3160518	Solenoid coil	1	208-240V AC, 50/60HZ	ALCO		
573	3160507	Solenoid coil	1	120V AC, 50/60Hz, IP10	ALCO		
573	3160494	Solenoid coil	1	24V AC, 50/60 Hz	ALCO		
573	2831337	Solenoid coil	1	24 V, DC	Alco		
574	2954954	Gasket: control valve	1		Cannot be used for blind flange		
575	2871546	Bolt	1				

Spare parts lists are subject to change without notice. If in any doubt, please contact your local Emerson Climate Technologies representative.

8DH6-400X

Pos No.	Ident No.	Description	Qty	Technical information	Additional information	Comments	Replaced by
575	2871524	Bolt	1				
	2830016	Shipping plate	1			For Cap Control Inactive	
	2877997	Gasket: blind flange	1		To be used only with blind flange		
578	2880839	Gasket: below cylinder head	1		For UI Start/Capacity Control		
580	2496330	Flange: sweat	2				
581	2042028	Gasket	2			Flange Sweat	
582	6744780	Vibration absorber	1	1 1/8"			
583	2495882	Oil sight glass	1	AMI-1TT9, 1-1/8", ALCO (#805651)			
584	2038456	Cap nut	2				
585	2063909	Socket: insert	2				
	5401813	Oil & gas equalization kit: 1 comp	1				
	3131518	OM3-CCC Traxoil electronic oil level management system Kit includes : OM3 Traxoil, CCC adapter, 24V coil ,relais cable 6m, power cable 6m	1	35 bar		Replaces 8527938	
	8527518	Transformer	1	230 V / 24 VAC, 20 VA	ETC-523 ALCO (804332)		
	3131472	Differential Oil Check Valve	1	3,5 Bar	ODP-33A - #800366		
	2873768	Oil balance tube	1		Tandem Compressors		
590a	3168329	Oil pressure switch complete: OPS2	1	115/230V, 50/60 Hz	Sensor, switch, PG connection		
	5404652	Oil pressure switch with PG: OPS2	1	115/230 V, 50/60 Hz	Switch, PG connection		
	3164918	Oil pressure switch: OPS2	1	115/230 V, 50/60 Hz	Electronic switch		
	3112586	Gasket, oil sensor	1	Cu			
	2944124	O-ring: oil sensor	1				
	3110784	Sensor w gaskets: OPS1/OPS2	1				
	3112348	PG screw connection kit OPS	1				
	3112268	Protection cap: reset button OPS1	1				
591b	2966622	Oil pressure switch	1	ALCO FD113 ZU	Wo Capillary Tubes & Bracket		
	2942300	Oil pressure switch	1	ALCO FD113 ZU	W 2 Capillary Tubes & Wo Bracket		
593	3808214	Capillary tube w gasket: oil safety switch	2				
594	2974343	Gasket: Cu ring	4				
591c	3007704	Oil pressure switch: SENTRONIC 3	1		Wo Bracket & Sensor		
	2944124	O-ring: oil sensor	1				
	2951831	Gasket: sensor SENTRONIC	1				

Spare parts lists are subject to change without notice. If in any doubt, please contact your local Emerson Climate Technologies representative.

8DH6-400X

Pos No.	Ident No.	Description	Qty	Technical information	Additional information	Comments	Replaced by
	3107046	Sensor w gaskets: SENTRONIC	1			Caution! Obsolete And New Sentronic Parts, E.G. Obsolete Module With New Sensor, Must Not Be Used Commonly)	
	3107035	Extension cable: SENTRONIC	1			Caution! Obsolete And New Sentronic Parts, E.G. Obsolete Module With New Sensor, Must Not Be Used Commonly)	
	2998256	Fan assy: vertical: EBM	1	220/380V-3-50/60Hz	Wo Mounting Kit		3258933
	2998245	Fan assy: vertical: EBM	1	220V-1-50Hz	Wo Mounting Kit		
	2998267	Fan assy: vertical: EBM	1	500-3-50Hz	Wo Mounting Kit		
610	3231952	Mounting kit: EBM fan	1	Black			
	3097996	Capacitor 5 µF	1	5 µF / 400 V, 50 Hz	For Fan 220-1-50/60 Ebm		
	2190814	Semi synthetic oil - OBSOLETE	1	SHELL CLAVUS SD 22-12			
	3103953	Mineral oil	1	Suniso 3GS, 4 Liter			
	3139330	Ester oil	1	RL32-3MAF, 1Lt			
	3139341	Ester oil	1	RL32-3MAF, 5Lt			
	3139352	Ester oil	1	RL32-3MAF, 20Lt			

Spare parts lists are subject to change without notice. If in any doubt, please contact your local Emerson Climate Technologies representative.