Copeland™
brand products

Spare Parts List

KSL* - 100

230908_spac_3

Jan 19, 2019

EMERSON

KSL* - 100

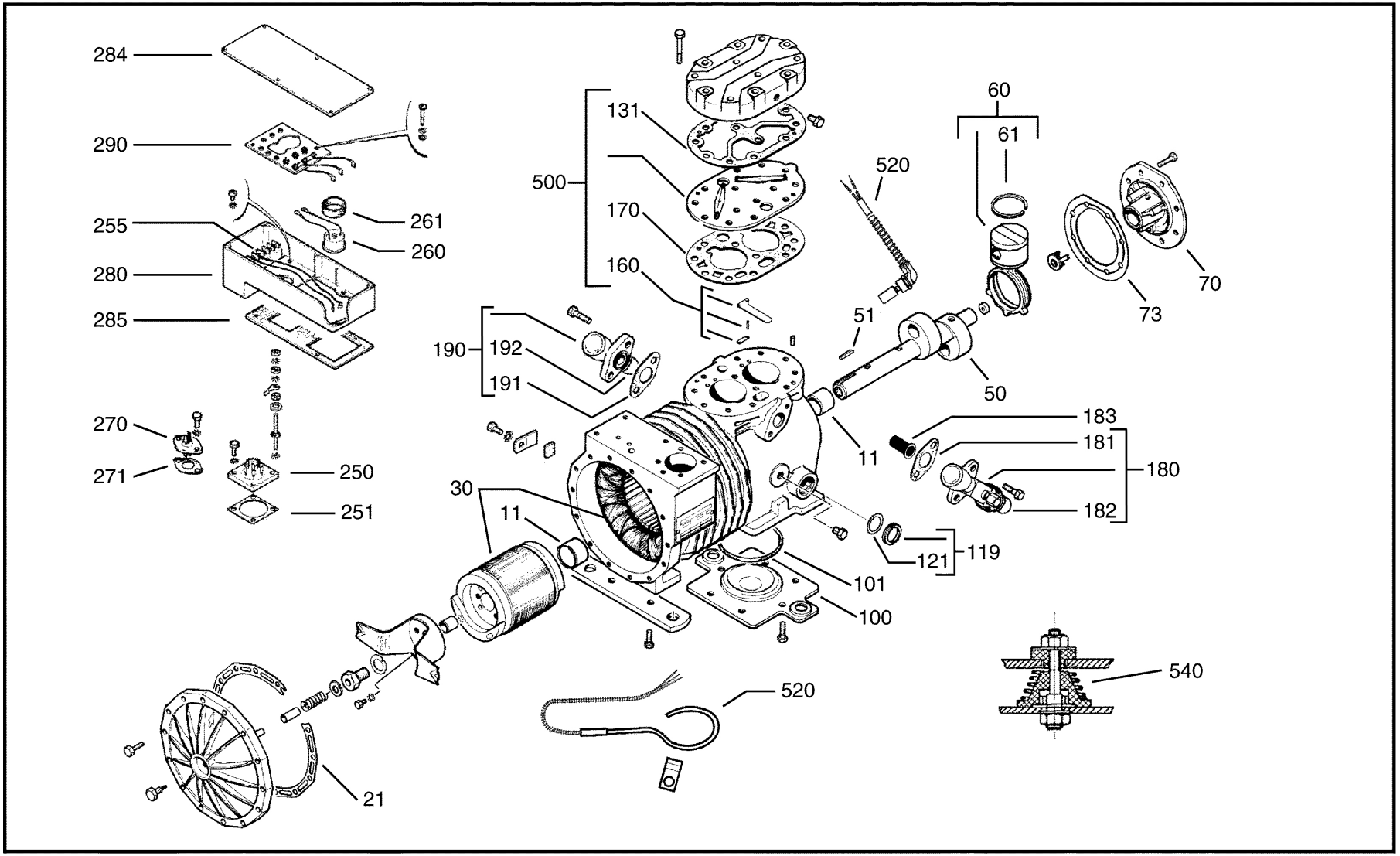

Spare parts lists are subject to change without notice. If in any doubt, please contact your local Emerson Climate Technologies representative.

KSL* - 100

600 **Horizontal Fan**
Horizontaler Zusatzlüfter
Ventilation horizontale

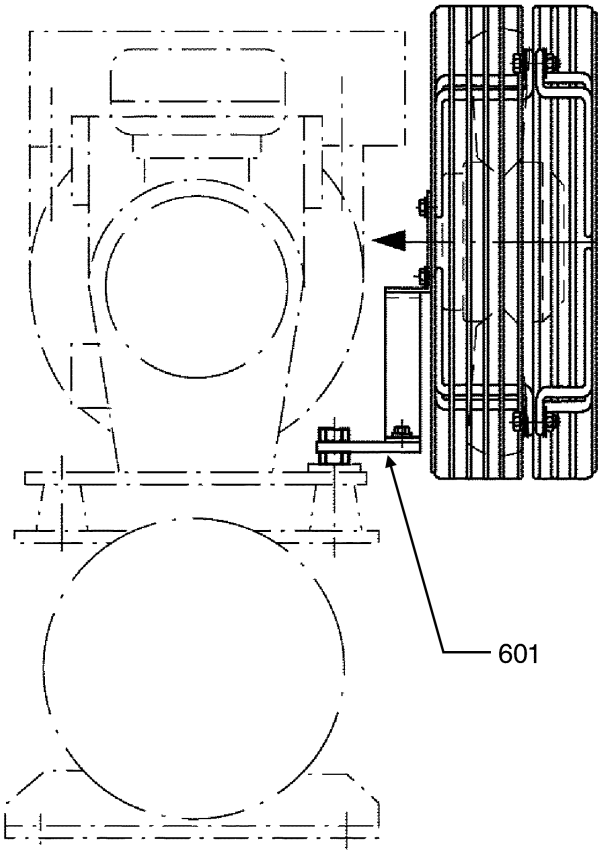

Oil balance tube
Ölausgleichsleitung
Equilibrage d'huile

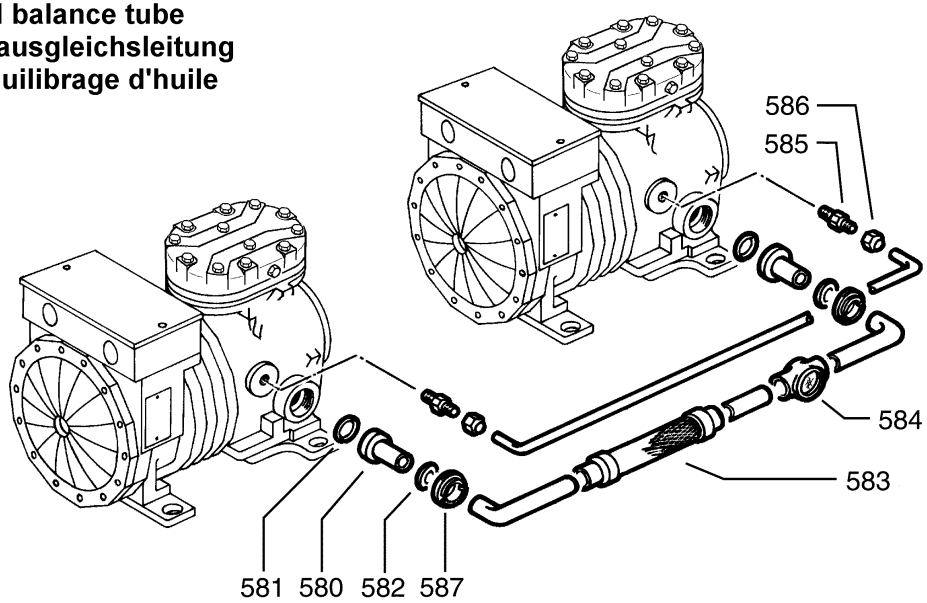

610
Additional fan 7W
Zusatzlüfter 7W
Ventilation additionalle 7W

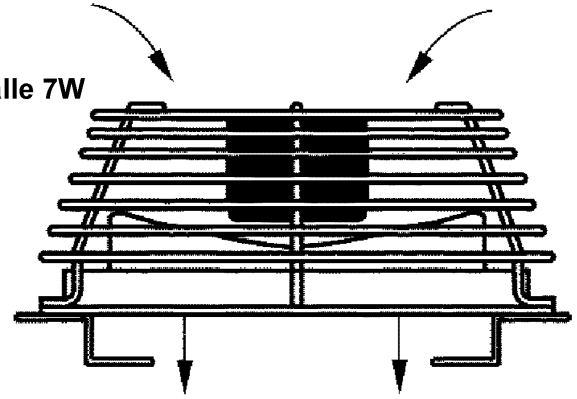

Spare parts lists are subject to change without notice. If in any doubt, please contact your local Emerson Climate Technologies representative.

KSL* - 100

Pos No.	Ident No.	Description	Qty	Technical information	Additional information	Comments	Replaced by
11	3013714	Bearing	2				
21	2727490	Gasket: stator cover	1				
30	2568517	Motor unit: 1HP CAG	1		TBC		
30	4561841	Motor unit: 1HP EWL/N or 42T	1				
30	4561852	Motor unit: 1HP EWK or 49	1				
50	2043714	Eccentric shaft	1				
51	2043543	Crankshaft key	1				
60	2835942	Piston & conrod assy	1				
61	2918805	Piston ring	2				
70	2988277	Housing cover alu assy	1				
73	2727489	Gasket: housing cover	1				
100	3115201	Bottom plate - from 19.03.2001	1				
101	2042142	Gasket	1				3198297
119	2834052	Sight glass assy	1	1 1/8"-12 UNF-2A			
121	2043292	Gasket O'ring sight glass	1				
	2831213	Sightglass removal tool	1				
131	3001080	Gasket: below cylinder head	1				
	2845329	Gasket kit for valve plate	1				
170	3191183	Gasket: below valve plate	1	.024"			
160	2836707	Valve plate parts: suction reed, spring, pin	1				
180	3806683	Shut-off valve w gasket & w/o bolts	1	5/8"	Brazed	Suction	
181	2529947	Gasket	1			Suction	
182	2943665	Valve cap	1		for AWA & Nobis		
183	3806707	Suction screen w gasket	1				
190	3806672	Shut-off valve w gasket & w/o bolts	1	1/2"	Brazed	Discharge	
190	2837006	Shut-off valve w gasket - OBSOLETE	1		Flare	Discharge	3806672
191	2529947	Gasket	1			Discharge	
192	2943665	Valve cap	1		for AWA & Nobis		
	2846071	Shipping plate kit	1		W Gaskets & Screws	Suction	
	2846071	Shipping plate kit	1		W Gaskets & Screws	Discharge	
250	2727274	Fusite: terminal assy 6-pole	1				
251	2727887	Gasket: fusite	1				
255	3216455	Module: thermistor protection	1	Kriwan INT69-2 115V / 230V Internal (standard)			
255	3161191	Module: thermistor protection	1	Kriwan INT69 24V DC	Internal		
255	3161204	Module: thermistor protection	1	Kriwan INT69 24V AC	Internal		
255	3237201	Module: thermistor protection	1	Kriwan INT69 200-260V AC (export)	Internal		

Spare parts lists are subject to change without notice. If in any doubt, please contact your local Emerson Climate Technologies representative.

KSL* - 100

Pos No.	Ident No.	Description	Qty	Technical information	Additional information	Comments	Replaced by
255	2495951	Module: thermistor protection	1	Kriwan INT69 110V	External		
255	2640897	Module: thermistor protection	1	Kriwan INT69 380V	External		
260	2043758	Klixon	1			Ca_	
270	2489656	Fusite - terminal assy - 2 pole	1				
271	2946084	Gasket: fusite	1	2-pole			
280	3129157	Terminal box with gasket	1				
284	2954169	Terminal box cover: with wiring diagram	1	CAG			
284	6706986	Terminal box cover: wo wiring diagram	1				
284	2954158	Terminal box cover: with wiring diagram	1	EWL			
285	6707718	Gasket: terminal box	1				
290	2950305	Terminal board assy: 1 phase	1				
290	2950327	Terminal board assy: 3 phase	1				
500	2490774	Valve plate kit w gaskets	1				
510	2490785	Gasket kit DK*	1				
520	2497184	Crankcase heater	1	50W, 230V	External		
520	2728608	Crankcase heater	1	50W, 115V	External		
520	2822328	Crankcase heater	1	50W, 440/480V	External		
520	2948773	Crankcase heater	1	27W, 200/600V	Internal	For Version D,P & Dkb/F	3210275
	2942537	Heat sink paste tube 8-12gr.	1		For Crankcase Heater, NTC Sensor		
540	2186833	Mounting parts kit	1		Springs, standard for single use		
	2954523	Mounting parts kit (rubber)	1		for parrallel applications		
550	2972041	Single phase equipment	1		CA_, except CAZ		
	2971888	Run capacitor 20 µF	1	20 µF / 420 V, 50/60 Hz		CA_	
	2039664	Start capacitor	2	88-108 µF / 250 V, 60 Hz		CAZ & CAG	
	2961230	Control relay: single phase equipment CA_	1				
	2963269	Box: single phase equipment CA_	1				
	2971913	Cover: single phase box, CA_	1				
580	2304560	Pipe socket	2				
581	2043292	Gasket O'ring sight glass	2				
582	2912330	Gasket: pipe socket	2				
583	2040077	Vibration absorber	1				
585	2986384	Insert socket	2	3/8"-1/8NPT ; 5/8"-18UNF			
586	2038456	Cap nut	2				
	3106974	Oil & gas equalization kit: 1 comp	1				

Spare parts lists are subject to change without notice. If in any doubt, please contact your local Emerson Climate Technologies representative.

KSL* - 100

Pos No.	Ident No.	Description	Qty	Technical information	Additional information	Comments	Replaced by
	3131494	OM3-CCB Traxoil electronic oil level management system Kit includes : OM3 Traxoil, CCB adapter, 24V coil ,relais cable 6m, power cable 6m	1	35 bar	1-1/18"-12UNF		
	8527518	Transformer	1	230 V / 24 VAC, 20 VA	ETC-523 ALCO (804332)		
587	3139909	Retainer: oil sight glass	2				
600	3006449	Fan assy: horizontal EBM	1	25W, 220V-1-50Hz, B	w Mounting parts		
601	3192108	Mounting kit: fan horizontal, EBM	1	B			
610	3006438	Fan assy: vertical	1	7W, 220V-1-50Hz, B	for Leroy Somer motor		
	2830743	Spray Black	1	RAL 9005, 400ml			
	3011489	Paint RAL9005, 6 x 400ml	1				
	2190814	Semi synthetic oil - OBSOLETE	1	SHELL CLAVUS SD 22-12			
	3103953	Mineral oil	1	Suniso 3GS, 4 Liter			

Spare parts lists are subject to change without notice. If in any doubt, please contact your local Emerson Climate Technologies representative.