Copeland™
brand products

Spare Parts List

DLFD/E - 301

230908_spac_3

Jan 19, 2019

EMERSON™

DLFD/E - 301

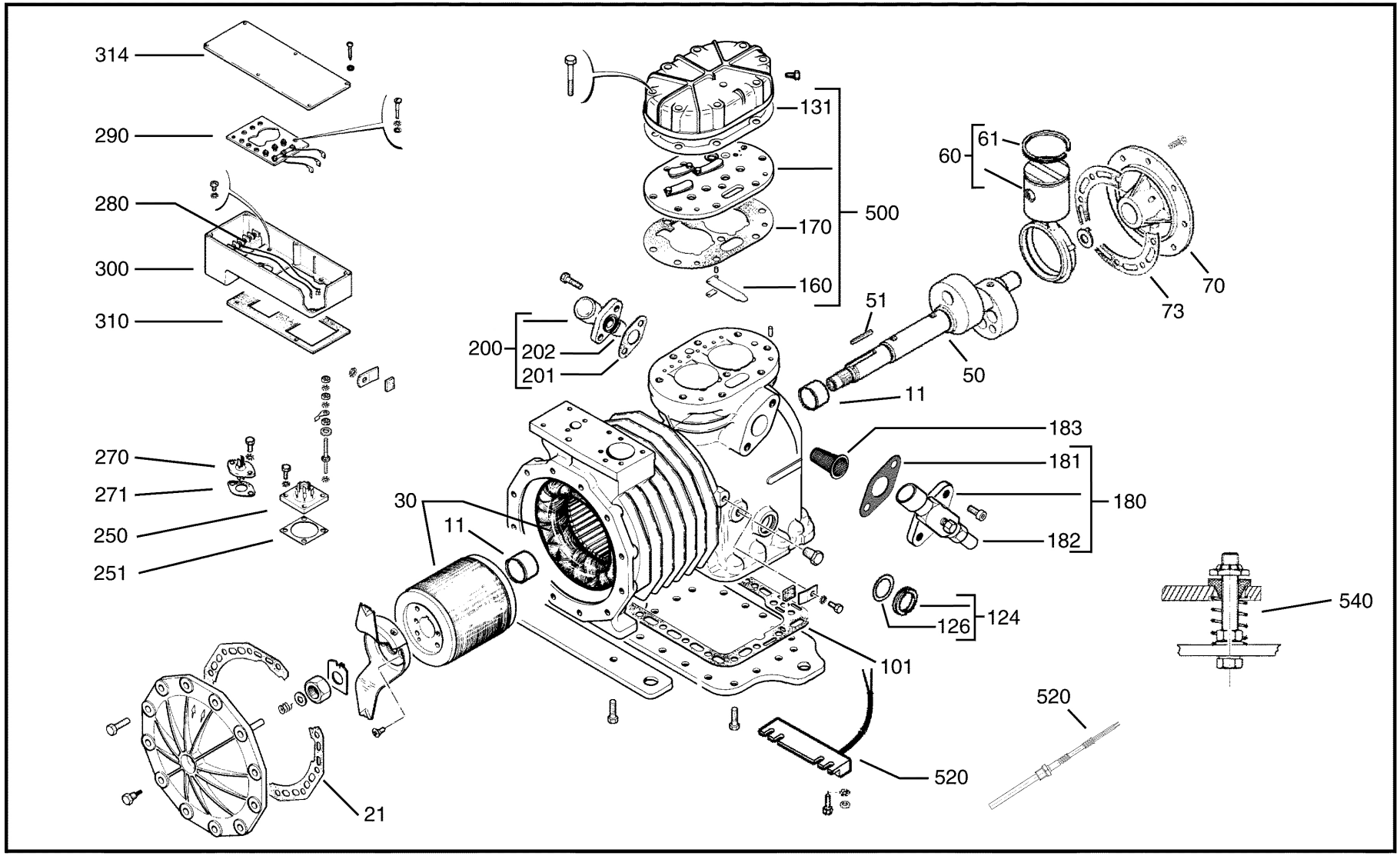

Spare parts lists are subject to change without notice. If in any doubt, please contact your local Emerson Climate Technologies representative.

DLFD/E - 301

600 Horizontal Fan EBM
Horizontalen Zusatzlüfters EBM
Ventilation horizontale EBM

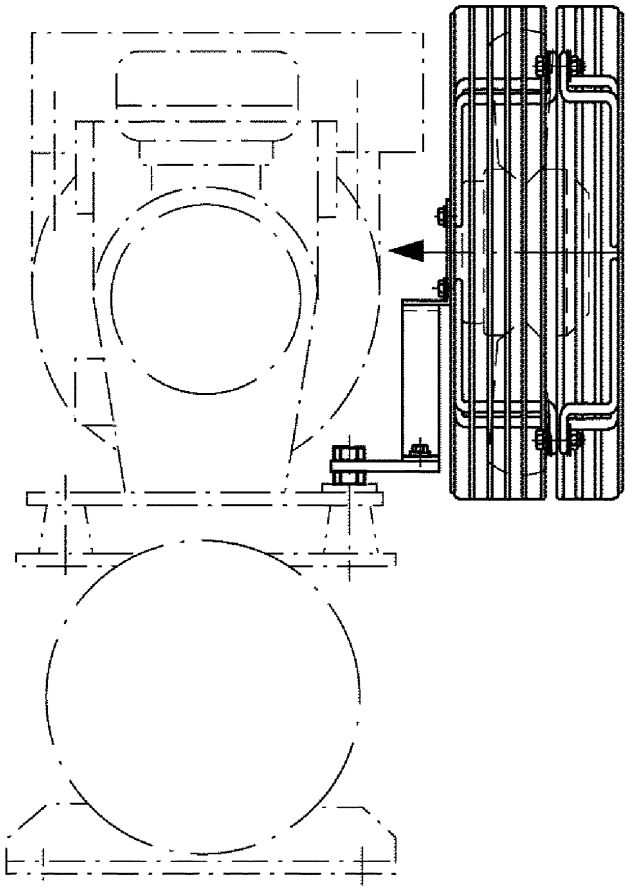

Oil Balance Tube for 2 compressors
Ölausgleich für 2 Verdichter
Equilibrage d'huile entre 2 compresseurs

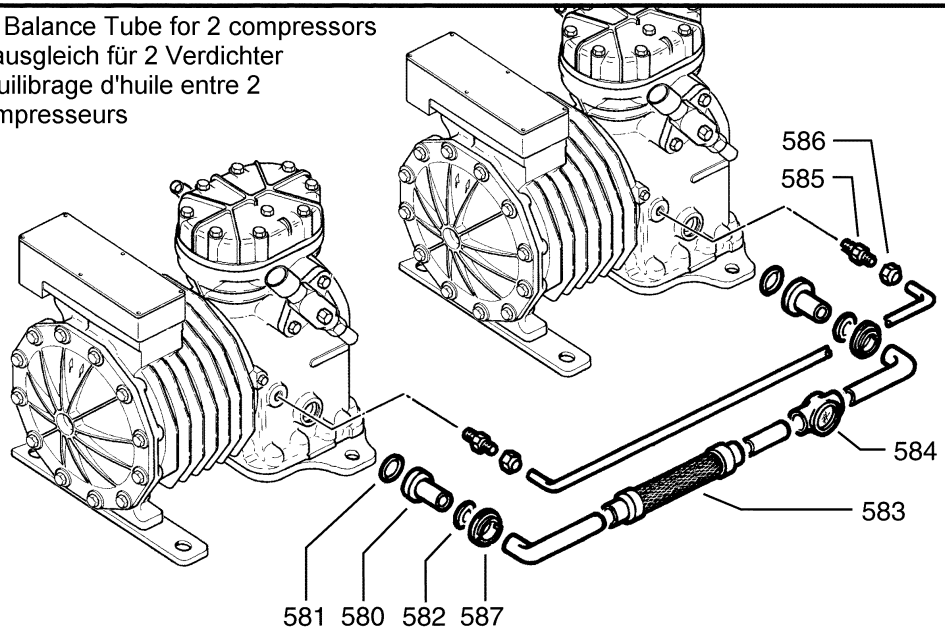

600 Additional Fan/Ventilation
Additionelle/Zusatzfilter 75 Z EBM

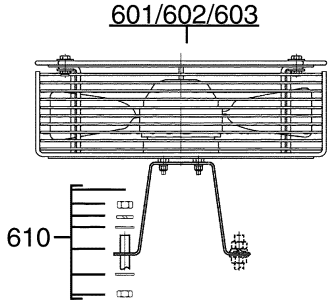

600

Additional Fan/Fan
Additionelle/
Zusatzfilter

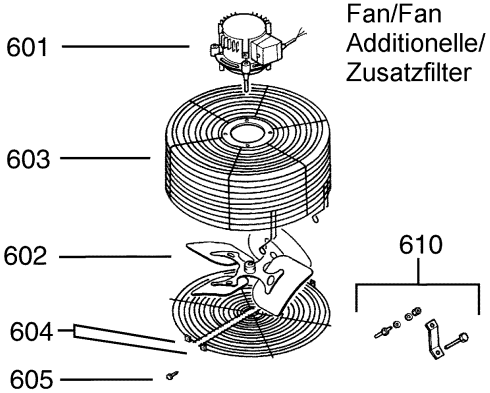

Spare parts lists are subject to change without notice. If in any doubt, please contact your local Emerson Climate Technologies representative.

DLFD/E - 301

Pos No.	Ident No.	Description	Qty	Technical information	Additional information	Comments	Replaced by
11	3013725	Bearing	2		Body, Main, Plain, Motor & Gear Side		
21	2525138	Gasket: stator cover	1				
30	2568857	Motor unit: 3,0HP EWL	1				
30	2568868	Motor unit: 3,0HP EWM	1				
30	2568891	Motor unit: 3,0HP EWK	1				
50	2045049	Eccentric shaft	1				
51	2297339	Crankshaft key	1				
60	2835986	Piston & conrod assy	1				
61	2918827	Piston ring	2				
70	2988288	Housing cover alu assy	1				
73	2948693	Gasket: housing cover	1				
101	2729383	Gasket: bottom plate	1				
124	2834052	Sight glass assy	1	1 1/8"-12 UNF-2A			
126	2043292	Gasket O'ring sight glass	1				
	2831213	Sightglass removal tool	1				
131	2915168	Gasket: below cylinder head	1				
	2845374	Gasket kit for valve plate	1				
160	2836729	Valve plate parts: Suction Reed, Pad, Pin	1				
170	2949710	Gasket: below valve plate	1	0.75-0.8			
180	2837039	Shut-off valve w gasket & bolts	1	7/8"	Brazed	Suction	
181	2963043	Gasket	1			Suction	
182	2829909	Valve cap	1		for AWA & Nobis	Suction	
183	3806718	Suction screen w gasket	1				
200	3806683	Shut-off valve w gasket & w/o bolts	1	5/8"	Brazed	Discharge	
201	2529947	Gasket	1			Discharge	
202	2943665	Valve cap	1		for AWA & Nobis	Discharge	
	2846082	Shipping plate kit	1		W Gaskets & Screws	Suction	
	2846071	Shipping plate kit	1		W Gaskets & Screws	Discharge	
250	2727274	Fusite: terminal assy 6-pole	1				
251	2727887	Gasket: fusite	1				
270	2489656	Fusite - terminal assy - 2 pole	1		not valid for DK compressors with index A or B		
271	2946084	Gasket: fusite	1	2-pole	not valid for DK compressors with index A or B		
280	3216455	Module: thermistor protection	1	Kriwan INT69-2 115V / 230V Internal (standard)			
280	3161204	Module: thermistor protection	1	Kriwan INT69 24V AC	Internal		

Spare parts lists are subject to change without notice. If in any doubt, please contact your local Emerson Climate Technologies representative.

DLFD/E - 301

Pos No.	Ident No.	Description	Qty	Technical information	Additional information	Comments	Replaced by
280	3161191	Module: thermistor protection	1	Kriwan INT69 24V DC	Internal		
280	3237201	Module: thermistor protection	1	Kriwan INT69 200-260V AC (export)	Internal		
280	2495951	Module: thermistor protection	1	Kriwan INT69 110V	External		
280	2640897	Module: thermistor protection	1	Kriwan INT69 380V	External		
290	2950327	Terminal board assy: 3 phase	1				
300	3129157	Terminal box with gasket	1				
310	6707718	Gasket: terminal box	1				
314	2954158	Terminal box cover: with wiring diagram	1	EWL			
314	6706986	Terminal box cover: wo wiring diagram	1				
500	2830345	Valve plate kit w gaskets	1				
510	2490832	Gasket kit	1				
520	4577420	Crankcase heater	1	65W, 240V	External		
520	4577431	Crankcase heater	1	65W, 120V	External		
520	4577442	Crankcase heater	1	65W, 480V	External		
520	3210140	Crankcase heater	1	70W, 220V	Internal	For Model "E", "P"	
520	3210286	Crankcase heater	1	70W, 115V	Internal	For Model "E", "P"	
	2942537	Heat sink paste tube 8-12gr.	1		For Crankcase Heater, NTC Sensor		
540	2188340	Mounting parts kit, Spring	1				
	2933266	Mounting parts kit (rubber for parallel)	1				
580	2304560	Pipe socket	2				
581	2043292	Gasket O'ring sight glass	2				
582	2912330	Gasket: pipe socket	2				
583	2040077	Vibration absorber	1				
584	2341258	Oil sight glass - OBSOLETE	1				
585	2063909	Socket: insert	2				
586	2038456	Cap nut	2				
587	3139909	Retainer: oil sight glass	2				
	3106963	Oil & gas equalization kit: 1 comp	1				
	3131494	OM3-CCB Traxoil electronic oil level management system Kit includes : OM3 Traxoil, CCB adapter, 24V coil ,relais cable 6m, power cable 6m	1	35 bar	1-1/18"-12UNF		
600	2987467	Fan assy: vertical: EBM	1	220V-1-50Hz	w Mounting parts		
600	2987456	Fan assy: vertical: EBM	1	380V-3-50Hz	w Mounting parts		
600	2979984	Fan assy: horizontal EBM	1	25W, 220V-1-50Hz	w Mounting parts		

Spare parts lists are subject to change without notice. If in any doubt, please contact your local Emerson Climate Technologies representative.

DLFD/E - 301

Pos No.	Ident No.	Description	Qty	Technical information	Additional information	Comments	Replaced by
600	2987478	Fan assy: vertical: EBM	1	500V-3-50Hz	w Mounting parts		
	2998256	Fan assy: vertical: EBM	1	220/380V-3-50/60Hz	Wo Mounting Kit		3258933
	2998245	Fan assy: vertical: EBM	1	220V-1-50Hz	Wo Mounting Kit		
	2998267	Fan assy: vertical: EBM	1	500-3-50Hz	Wo Mounting Kit		
610	2979973	Mounting kit: fan horizontal, EBM	1				
610	2987536	Mounting kit: fan vertical EBM	1				
	3097996	Capacitor 5 µF	1	5 µF / 400 V, 50 Hz	For Fan 220-1-50/60 Ebm		
601	2487456	Fan motor	1	220V-3-50Hz	For Additional 60W Fan (Leroy Somer motor)	If Motor 220-1-50, Please Order Additionally Run Capacitor 6 µF 2728686)	
610	2830390	Mounting kit	1		For Vertical Fan 60W (for Leroy Somer motor)		
	2728686	Run capacitor	1	6 µF / 400 V, 50 Hz	Fan 50/55/60 W (Leroy Somer motor)		
602	2189592	Fan blade	1		For Horizontal 60W (for Leroy Somer motor)		
602	2728131	Fan blade	1		4 Blades (for Leroy Somer motor)		
603	2052289	Fan guard	1		For 60W Horiz. Fan (for Leroy Somer motor)		
604	2052290	Cover: Fan Guard	1				
605	2939684	Bolt	4				
	2190814	Semi synthetic oil - OBSOLETE	1	SHELL CLAVUS SD 22-12			
	3103953	Mineral oil	1	Suniso 3GS, 4 Liter			

Spare parts lists are subject to change without notice. If in any doubt, please contact your local Emerson Climate Technologies representative.