S 15 51 Y

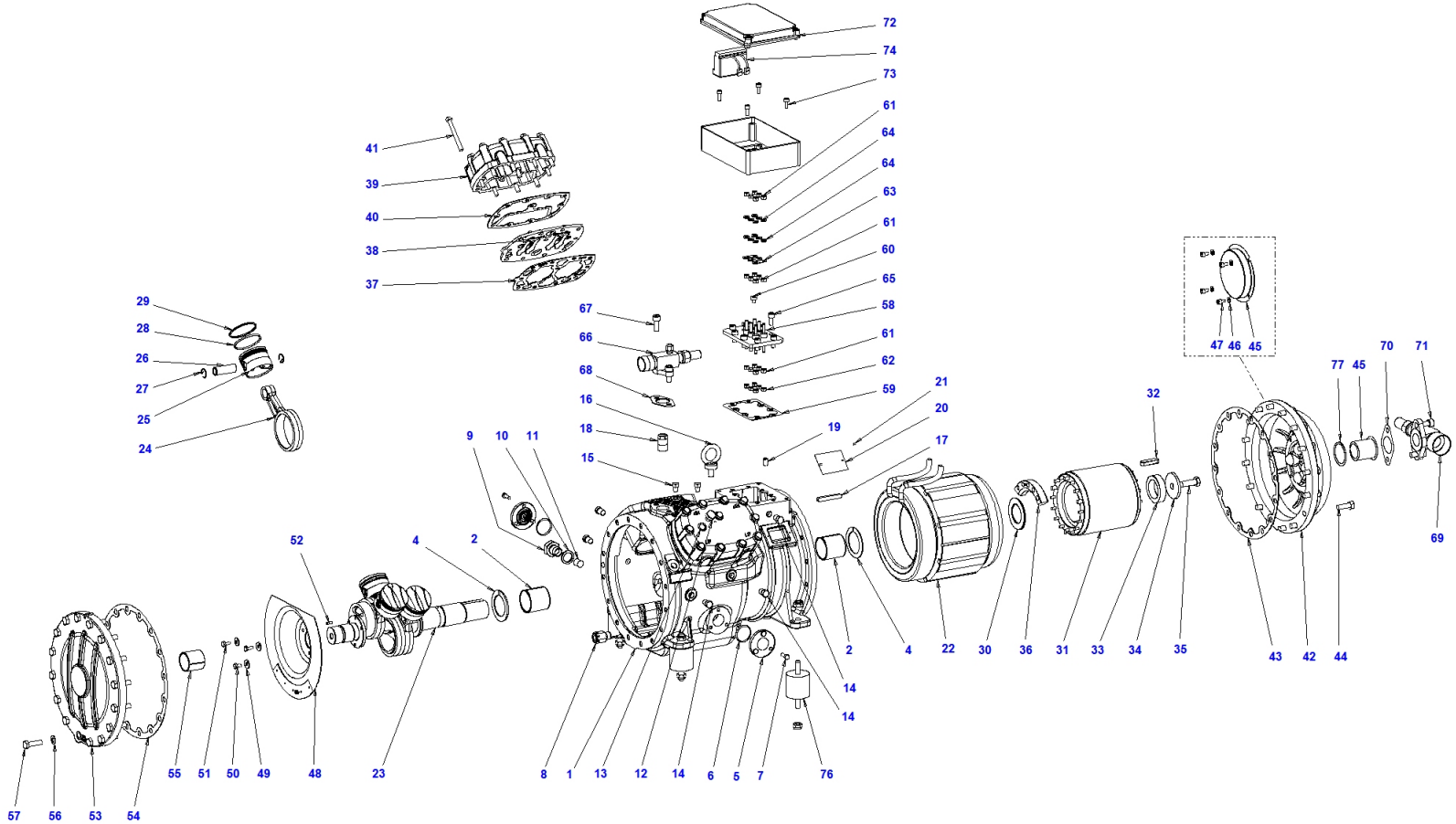
72
74
73
61
64
64
63
61
60
65
58
61
62
59
41
39
40
38
37
29
28
26
27
25
24
67
66
68
16
18
15
9
10
11
21
20
19
17
32
47 46 45
77 45
70
71
69
52
4
2
2
4
22
30
36
31
33
34
35
43
42
44
14
14
57
56
53
54
55
51
50
49
48
23
8
1
13
12
14
6
5
7
76

S 15 51 Y

| Pos. | Code | Description | Quantity | Note | Notice: |
|---|---|---|---|---|---|
| 1 | S4491001AA | Compressor body | 1 | | |
| 2 | S6501013-A | Main friction bearing | 2 | | |
| 4 | S4491011 | Thrust collar | 2 | | |
| 5 | SOS1 | Oil sight glass | 2 | | |
| 6 | S3131OR | O-ring for oil sight glass | 2 | | |
| 7 | TE1006016 | Screw M6x16 UNI5739 | 6 | | |
| 8 | S450A070 | Oil return valve | 1 | | |
| 9 | S4381053 | Magnetic plug | 1 | | |
| 10 | S4491056 | Gasket for magnetic plug | 1 | | |
| 11 | S4381054 | Magnet | 1 | | |
| 12 | S1451130 | Plug 1/4" gas ISO 228/1 | 1 | | |
| 13 | S1351056 | Gasket | 1 | | |
| 14 | S6501130 | Plug 1/4 NPT | 5 | | |
| 15 | S1251130 | Plug 1/8 NPT | 2 | | |
| 16 | GO1012000 | Raising ring | 1 | | |
| 17 | S4321063 | Key 8x5x60 UNI 7510 | 1 | | |
| 18 | S4491156 | Safety relief valve | 1 | | |
| 19 | GR101016 | Stop dowel | 1 | | |
| 20 | ML_S | Nameplate | 1 | | |
| 21 | RI1025035 | Rivet | 2 | | |

S 15 51 Y

| Pos. | Code | Description | Quantity | Note | Notice: |
|---|---|---|---|---|---|
| 22 | RS12A | Stator 230-400 / 3 / 50 DOL | 1 | | |
| 22 | RS12B | Stator 400 / 3 / 50 SDS | 1 | | |
| 22 | RS12CAMS | Stator 400 / 3 / 50 PWS | 1 | | |
| 22 | RS12S07 | Stator 400 / 3 / 60 PWS | 1 | | |
| 22 | RS12SAMS | Stator 230-400 / 3 / 60 DOL | 1 | | |
| 23 | S4491002AA | Shaft | 1 | | |
| 24 | S4491003AA | Connecting rod | 4 | | |
| 25 | S4491004 | Piston | 4 | | |
| 26 | S3631005 | Piston pin | 4 | | |
| 27 | S2331149 | Circlip | 8 | | |
| 28 | S4495001 | Compression ring | 4 | | |
| 29 | S4496001 | Oil scraper ring | 4 | | |
| 30 | S4301011 | Thrust collar | 1 | | |
| 31 | RR14 | Rotor | 1 | | |
| 32 | S4151063 | Key 12x8x45 UNI 6604-69 | 1 | | |
| 34 | S4501045 | Washer | 1 | | |
| 35 | TE1012035 | Screw M12x35 UNI5739 | 1 | | |
| 36 | S4381017 | Counterweight | 1 | | |
| 37 | S4491031A | Gasket valve plate - body | 2 | | |
| 38 | S4491026-HH | Valve plate | 2 | | |

S 15 51 Y

| Pos. | Code | Description | Quantity | Note | Notice: |
|---|---|---|---|---|---|
| 39 | S4481007AA | Head | 2 | | |
| 40 | S3631032 | Gasket valve plate - head | 2 | | |
| 41 | TE1208075 | Screw M8x75 UNI5737 | 22 | | |
| 42 | S4451010AA | Suction flange | 1 | | |
| 43 | S4451034 | Suction flange - body gasket | 1 | | If previous of 2007 please contact Frascold |
| 44 | TE1010030 | Screw M10x30 UNI5739 | 16 | | |
| 45 | S4451038-A | Suction strainer | 1 | From October 2016 | |
| 45 | S4491038-A | Suction strainer | 1 | Until September 2016 | |
| 46 | RO2006011 | Washer 6x10 UNI 1751A | 4 | | |
| 47 | TC2406010 | Screw M6x10 UNI5931 | 4 | | |
| 48 | S4381008 | Oil splashing disc | 1 | | |
| 49 | RO2006011 | Washer 6x10 UNI 1751A | 3 | | |
| 50 | TE1006010 | Screw M6x10 UNI5739 | 1 | | |
| 51 | TE1006014 | Screw M6x14 UNI5739 | 2 | | |
| 52 | SE1005012 | Pin | 1 | | |
| 53 | S4381009AA | Flange | 1 | | |
| 54 | S4451033 | Flange gasket | 1 | | If previous of 2007 please contact Frascold |
| 55 | S4031012-A | Main friction bearing | 1 | | |
| 56 | S4381056 | Gasket | 1 | | |
| 57 | TE1010030 | Screw M10x30 UNI5739 | 16 | From January 2011 | |

| Pos. | Code | Description | Quantity | Note | Notice: |
|---|---|---|---|---|---|
| 57 | TE1010035 | Screw M10x35 UNI5739 | 16 | Until December 2010 | |
| 58 | S4461040 | Terminal plate | 1 | 8 bolts version | |
| 58 | S4641040 | Terminal plate | 1 | 10 bolts version | |
| 59 | S4491041A | Connections plate gasket | 1 | 8 bolts version | |
| 59 | S4641043 | Terminal plate gasket | 1 | 10 bolts version | |
| 60 | TS4006008 | Screw M6x8 ISO 7045 | 1 | | |
| 61 | DE3006006 | Nut M6 UNI 5587 | 18 | | |
| 62 | DE2206006 | Nut M6X1X6 DIN 980 | 6 | | |
| 63 | S4451085 | Staple bar | 3 | | |
| 64 | RO1106012 | Washer 6.4x12x1.6 UNI 6592 | 12 | | |
| 65 | TC2708018 | Screw M8x18 UNI5931 | 8 | 8 bolts version | |
| 65 | TC2708025 | Screw M8x25 UNI5931 | 10 | 10 bolts version | |
| 66 | T00VRS052055 | Valve 1' 1/8 | 1 | | |
| 67 | TC2410025 | Screw M10x25 UNI5931 | 2 | | |
| 68 | S3621055C | Valve gasket | 1 | | |
| 69 | VRS064066 | Valve 1' 5/8 | 1 | | |
| 70 | S4951055C | Valve gasket | 1 | | |
| 71 | TC2410025 | Screw M10x25 UNI5931 | 2 | | |
| 72 | S4501039 | Terminal box | 1 | 8 bolts version | |
| 72 | S464A039 | Terminal box | 1 | 10 bolts version | |

S 15 51 Y

| Pos. | Code | Description | Quantity | Note | Notice: |
|---|---|---|---|---|---|
| 73 | TC2006016 | Screw M6x16 | 4 | | |
| 73 | TC2106012 | Screw M6x12 | 6 | | |
| 74 | EC01D-RIC | Electronic module diagnose 115/230V AC 50/60 Hz | 1 | | |
| 76 | SK205030 | Rubber vibration absordber kit | 1 | | |
| 77 | S4381055 | Suction strainer gasket | 1 | | |
| | S449A004 | Piston kit | 1 | | |
| | SK100520 | Valve kit | 1 | | |
| | SK100640 | Valve kit | 1 | | |
| | SK132200 | Connecting rod/piston kit | 4 | | |
| | SK140300 | Friction bearing kit | 1 | | |
| | SK1600 | Gasket kit | 1 | | If previous of 2007 please contact Frascold |
| | SK170100 | Oil sight glass kit | 2 | | |
| | SK181000 | 3 ph terminal box kit | 1 | | Use only with 8 bolts connection kit |
| | SK181100 | 3 ph terminal box kit | 1 | | Use only with 10 bolts connection kit |
| | SK231531 | Complete electric motor - 230-400 / 3 / 50 DOL | 1 | | |
| | SK231532 | Complete electric motor - 400 / 3 / 50 SDS | 1 | | |
| | SK231533 | Complete electric motor - 400 / 3 / 50 PWS | 1 | | |
| | SK231536 | Complete electric motor - 230-400 / 3 / 60 DOL | 1 | | |
| | SK231539 | Complete electric motor - 400 / 3 / 60 PWS | 1 | | |
| | SK260900 | Electric connections kit | 1 | | 8 bolts version |

S 15 51 Y

| Pos. | Code | Description | Quantity | Note | Notice: |
|---|---|---|---|---|---|
| | SK260910 | Electric connections kit | 1 | | 10 bolts version |
| | SK36206 | Valve plate kit | 2 | | |